Proposição de Infra-Estrutura de Dados Espaciais (SDI) Local, Baseada em Arquitetura Orientada por Serviços (SOA)

A Local Spatial Data Infrastructure (SDI) Proposition, Based on Service Oriented Architecture (SOA)

Pedro A. Oliveira1, Clodoveu A. Davis Junior2, Pedro Felipe A. Oliveira3
1Pontifícia Universidade Católica de Minas Gerais (PUC Minas)
pedroalves@pucminas.br
2Universidade Federal de Minas Gerais (UFMG)
clodoveu@dcc.ufmg.br
3GeoExplore – Belo Horizonte - MG – Brasil
pedro.oliveira@geoexplore.com.br

Thanks…

The authors would like to thank GASS and GPES teams of
Empresa de Informática e Informação
do Município de Belo Horizonte (Prodabel)*.

We'd like to thank also **PUC Minas**, that supported part of this research.

*The first author (Pedro A. Oliveira) works at the company since 1993. The other authors worked there for some time.

Summary

- Motivation
- Objectives
- Architecture
- Service Oriented Architecture
- Spatial Data Infrastructure
- SDI Architecture
- Case Study
- Final Considerations

Motivation

During years of studies and practice with geotechnologies, our team frequently have to face challenges working with urban cadastre.

The most significant recent difficulties, pointed by the technicians, are:

- To maintain and publish the great volume of geographical information in the database.
- To share data from different contexts.

Objectives

This work presents a case study, by now in the initialization phase, where Service Oriented Architecture (SOA) and Spatial Data Infrastructure (SDI) concepts will be joined in a local government context, thus providing the stakeholders with a solution for the two challenges stated here.

Architecture

According to Fowler an application architecture can be useful, mainly for 2 purposes:

- To decompose the totality into minor parts.

- To represent a general stable model, that isn’t subject to great changes

Service Oriented Architecture

SOA can be understood as a logical separation of an application layers, based on the principle of business logic. Web Services are one of its main (but not the only) supports.

Thus, in SOA approach every technological decision (like “make or by” analysis) must be justified via cost-benefit studies.

www.soainstitute.org

Spatial Data Infrastructure

SDI may be seen as a possible way to solve the classical interoperability problem in GIS. But it isn't only so!

Differently from GIS, SDI is centered on services, not on information.

SDI, although a concept from the nineties, isn't yet completely understood and implemented in all government levels.

Initiatives like the Inspire project* seems too complex in scope, for a beginner. This kind of top-down approach may not prioritize local initiatives, by principle.

*http://inspire.jrc.ec.europa.eu

SDI Architecture

Web platform applications demand a new architecture, able to support such specifics characteristics.
International efforts like the Open Geospatial Consortium (OGC), that joins academy research and the market needs, are developing new patterns.
It seems that, finally the dreamed convergence in geographical systems is now becoming possible.
In this context, SDI should be proposed in all scales.
Local SDI initiatives are still timid in the world; in Brazil, we don’t know any.

SDI Architecture

According to Davis, Alves (2006b) three elements emerge when we try to design an SDI architecture:

- Interoperability: provided by services and data catalogue.
- Web Services: the architectural core.
- Web portal: the entry point of the system.

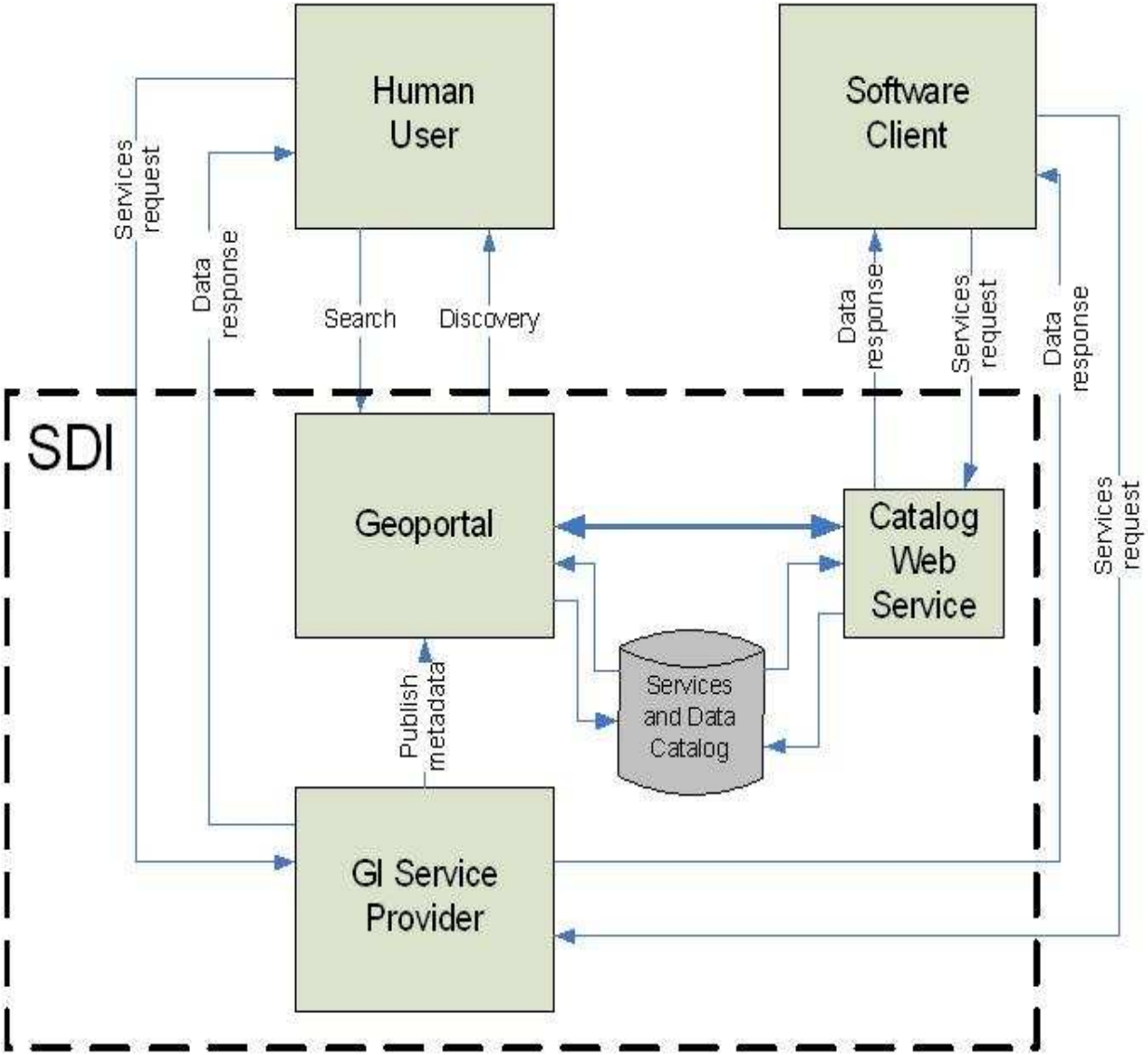

General SDI Architecture

Davis; Alves, 2006

Case Study

Belo Horizonte (BH) was one of the first cities in Brazil to adopt geoprocessing.

Over the last 18 years the local IT Company (Prodabel) developed a complete GIS environment, becoming able to manipulate a large data volume it collects and receives from third parties.

Nowadays, the city hall is trying to spread geotechnologies all over the public organizations.

Case Study

The complex GIS environment, supplied by different software solutions, was becoming so difficult to manage that the technicians had to demand from the staff a decision.

Supported by technical criteria, the company decided to adopt an “open”* architecture.

Then, three key aspects were set:

- Thematically specialized databases.
- Interoperability.
- Decentralized access.

* Open: based on technological patterns instead of products.

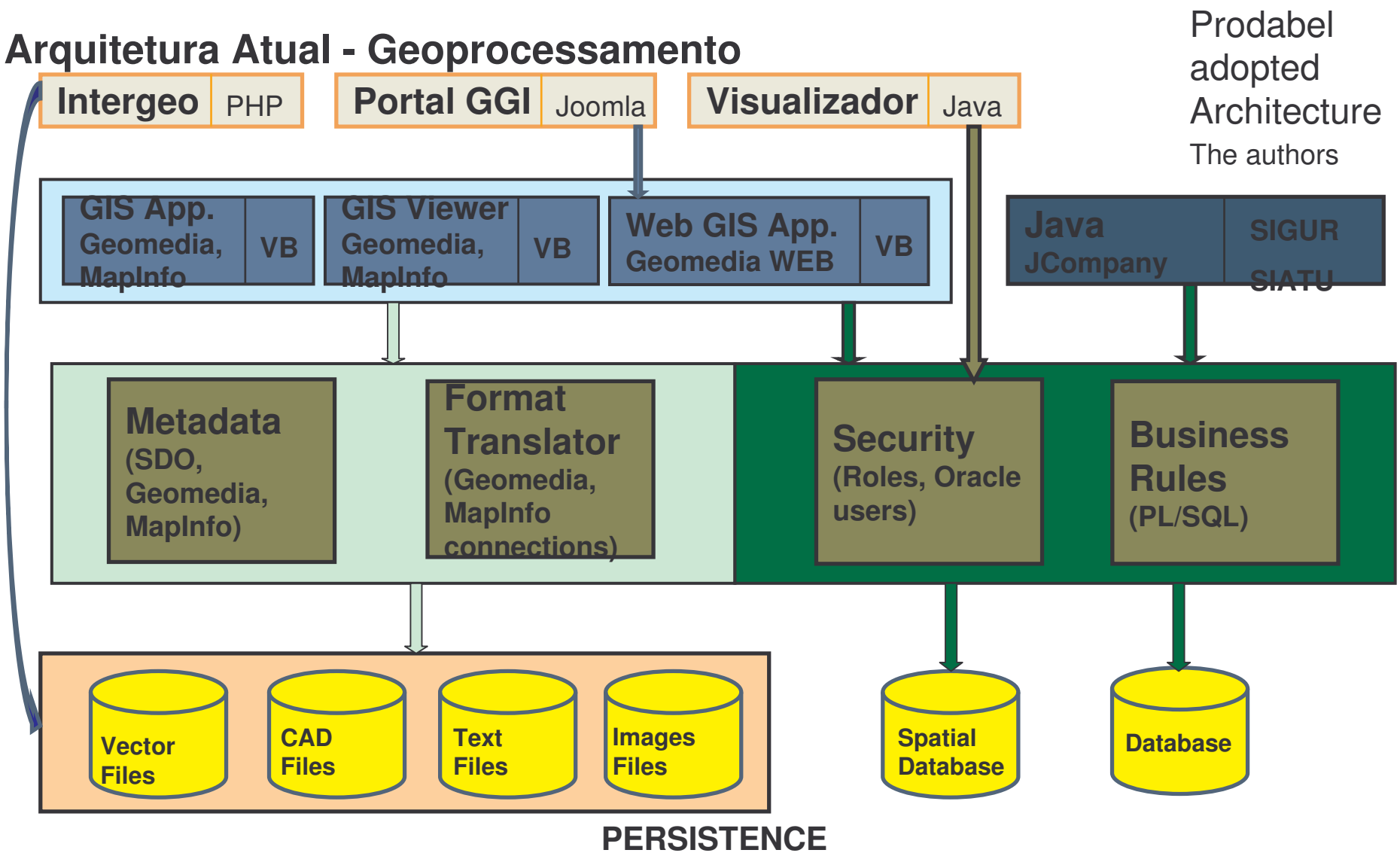
Arquitetura Atual - Geoprocessamento
Prodabel adopted Architecture
The authors
Intergeo
PHP
Portal GGI
Joomla
Visualizador
Java
GIS App.
Geomedia, MapInfo
VB
GIS Viewer
Geomedia, MapInfo
VB
Web GIS App.
Geomedia WEB
VB
Java
JCompany
SIGUR
SIATU
Metadata
(SDO, Geomedia, MapInfo)
Format Translator
(Geomedia, MapInfo connections)
Security
(Roles, Oracle users)
Business Rules
(PL/SQL)
Vector Files
CAD Files
Text Files
Images Files
Spatial Database
Database
PERSISTENCE

Case Study

According to Davis Jr., Alves (2006a) a local SDI should include (but not only):

- A basemap.
- Personal location.
- Geocoding / address recognition and location.
- Basic routing services.
- Public transportation systems.
- Public services.
- Private services.
- Emergency.

Case Study

The next picture shows the high level architecture proposed for Prodabel and Belo Horizonte city hall.
The creation of Model-View-Controller layers separation made possible to simplify the model as a whole.
The existence of a persistence layer, on the other hand, is an architectural option, that enables a separation between persistence and the controls related to it.
The first web service to be developed will provide an addressing facility.

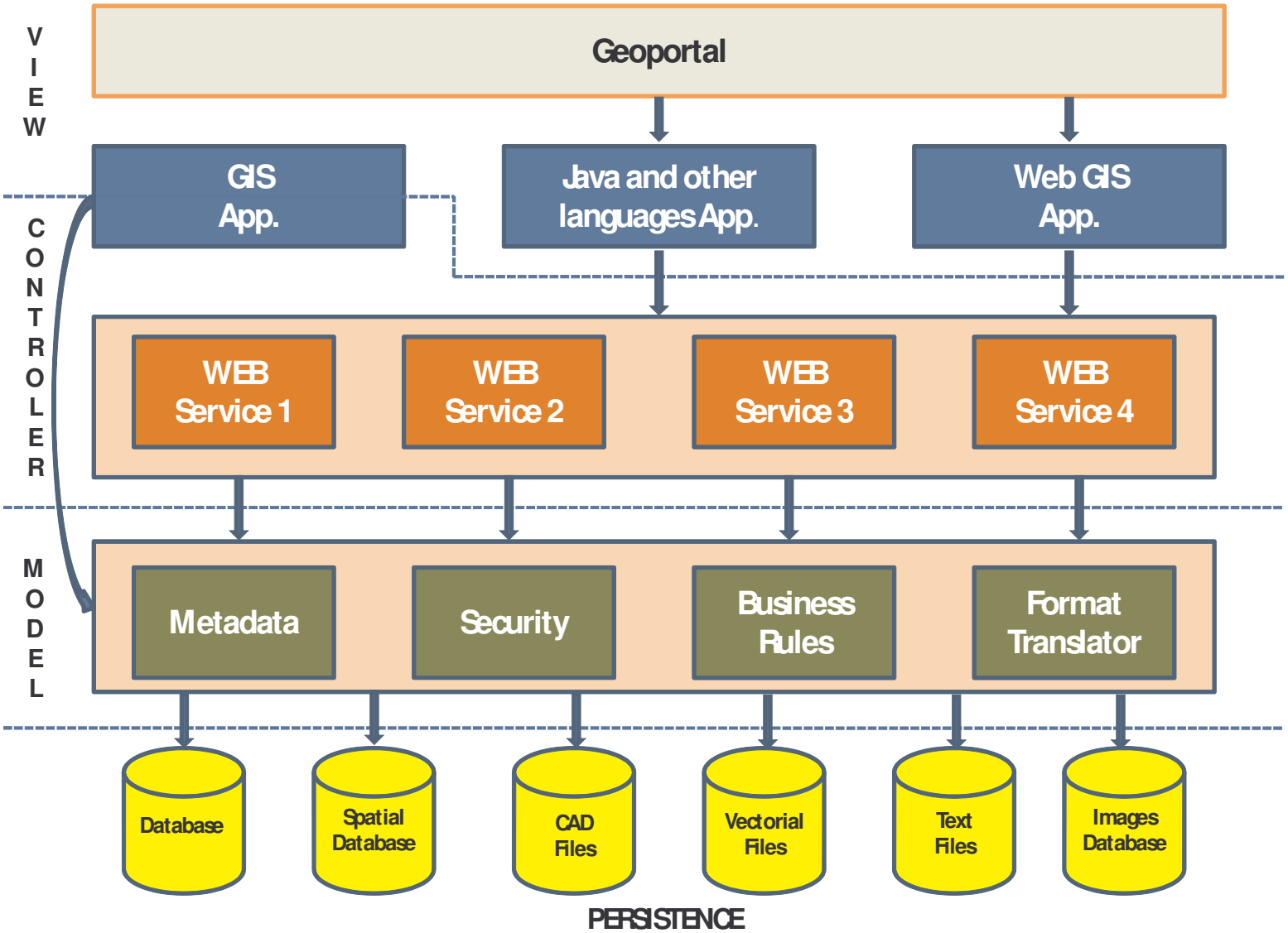

Prodabel proposed Architecture

The authors

Final Considerations

The evolution of this conceptual work will generate a new project, expected to be completed in the next year (2009). We hope that the steps that follow are:

- Develop a detailed architecture of the proposed model.
- Analyze the pros and cons.
- Implement a proof of concept.
- Review the model.
- Implement the architecture in real scale.

The existence of a wide cooperation agreement ensures the viability of creating this local SDI instance.

References

Booch, G; Rumbaugh, J; Jacobson, I. (2000) UML, Guia do Usuário. Elsevier, Rio de Janeiro.

Davis Jr., C. A.; Oliveira, P. A. (2002) SIG Interoperável e Distribuído para Administrações Municipais de Grande Porte. Informática Pública, Belo Horizonte (MG), v. 4, n. 1, p. 121-141.

Davis Jr., C. A. D.; Alves, L. L. (2006a) *Local Spatial Data Infrastructure Based on Service Oriented Architecture. In: Proceedings of Brazilian Symposium on GeoInformatics* (Geoinfo, 2005).

Davis Jr., C. A. D.; Alves, L. L. (2006b) *Interoperability through Web Services: Evaluating OGC Standards in Client Development for Spatial Data Infrastructures. In: Proceedings of Brazilian Symposium on GeoInformatics* (Geoinfo, 2006).

Davis Jr., C. A.; Fonseca, F. T. (2007) *Assessing the Certainty of Locations Produced by an Address Geocoding System. Geoinformatica 11(1), 103-129, 2007.*

Fowler, M. (2006) Padrões de Arquitetura de Aplicações Corporativas. Bookman, São Paulo.

Oliveira, P. A.; Oliveira, M. P. (2005) Usos de um Sistema de Informação Geográfico (SIG) em Cadastro Técnico Municipal (CTM): A experiência de Belo Horizonte. In: Informática Pública, ano 8, n.1.

Oliveira, P. F. A.; Oliveira, P. A. (2008) Arquitetura Orientada a Serviços (SOA): Um Estudo de Caso em Sistemas de Informação Geográficos. In: Anais SIMGEO 2008.

www.ogc.org

www.soainstitute.org/index.php

Questions?

pedroalves@pucminas.br